1110-03 SMA

1 5/8 DIRECTIONAL COUPLER

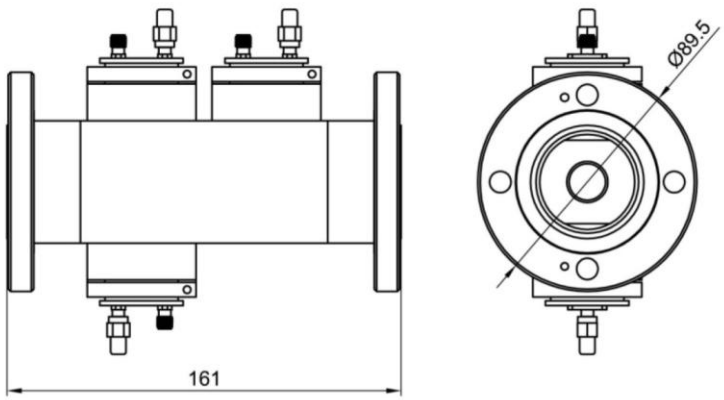

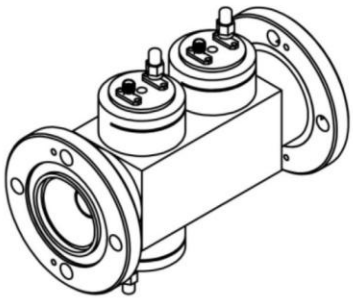

Electrical Characteristics		
Frequency Range	FM Band	87.5 ÷ 108 MHz
	VHF BIII	170 ÷ 230 MHz
	UHF BIV-V	470 ÷ 862 MHz
Insertion Loss by Channels		< 0.05 dB
Return Loss by ch. (VSWR)		> 30 dB (≤ 1.06)
Input/Output Impedance		50 Ω
Coupling Factor		−35 ÷ −58dB (*)
Amplitude variation	FM Band	± 1 dB
	VHF BIII	± 1.5 dB
	UHF BIV-V	± 3 dB
Directivity		> 30 dB

(*) To be define at order confirmation

dwg.	quality control	date	scale		A4	sheet
		03.07.2017	1:2		210X297	1/1

TITLE: 1 5/8" DIRECTIONAL COUPLER WITH THREE SMA PROBE

CODE: 1110-03-SMA

REV.

ONAIR MEDYA LTD. | www.onair.com.tr Tel: +90216 5407045 | Fax: +90216 5407046 | info@onair.com.tr

Yukarı Dudullu Mah. Necip Fazıl Bulvarı Keyap Sitesi D-1 Blok No:44/56, Umraniye Istanbul TURKEY